J DENTAL CARE

just smile

JD ICON PLUS T

The power of T design

conical connection

APPROVED FDA APPROVED

Made in Italy

JD ICON PLUS T

PRODUCT FEATURES

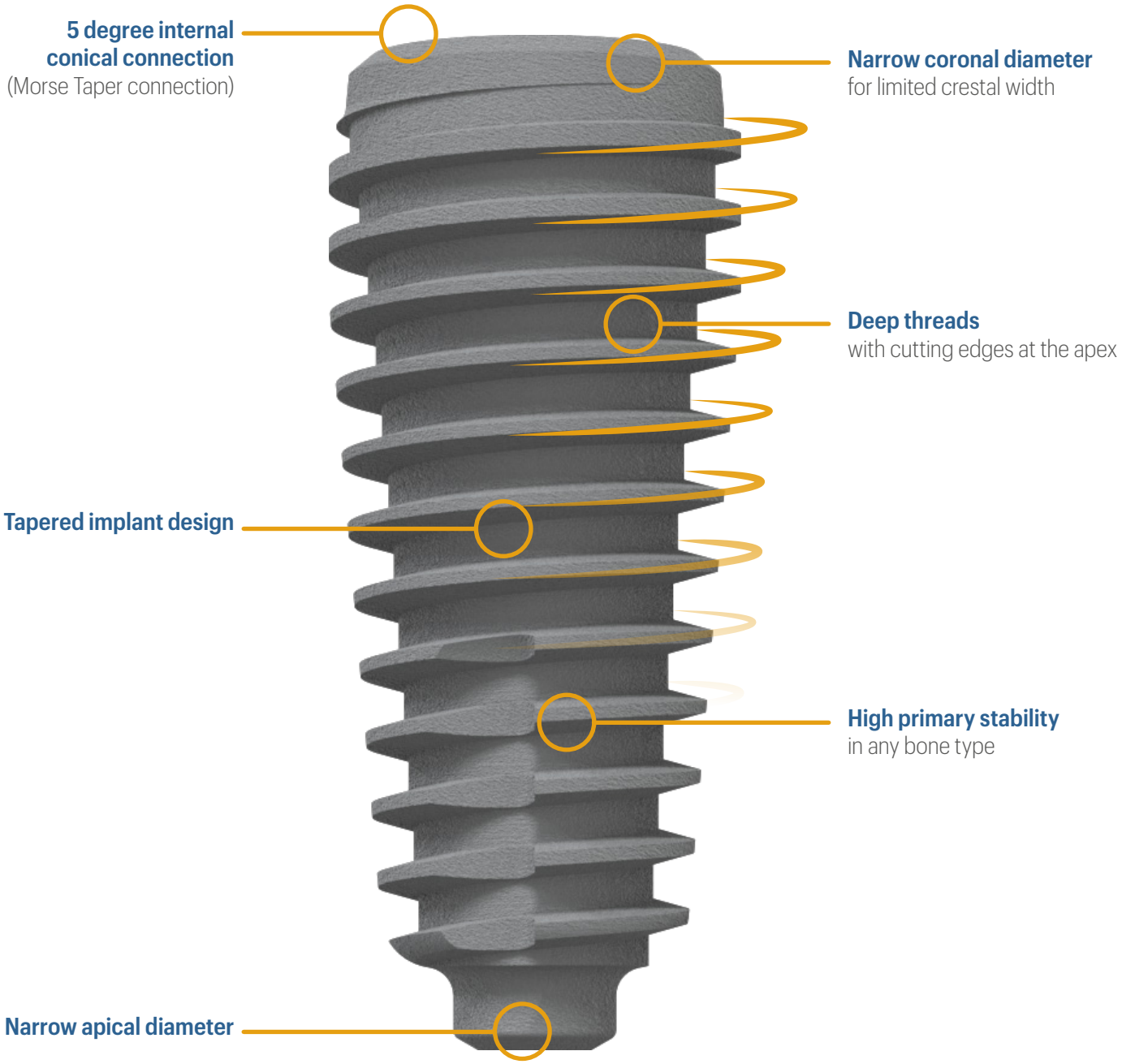

PRODUCT SPECIFICATIONS

The JDIcon Plus T dental implants are available in the diameters and lengths shown in the following table:

IMPLANT DIAMETER	LENGTH	TIP DIAMETER	PLATFORM DIAMETER	ABUTMENT INTERFACE
Ø 3,5	10, 11.5, 13	1.6	3.4	3.1
Ø 4,0	8.5, 10, 11.5, 13, 15, 18	1.75	3.5	3.1
Ø 4,5	8.5, 10, 11.5, 13	1.75	3.6	3.1
Ø 5,0	8.5, 10, 11.5, 13	2.2	4.0	3.1
Ø 6,0	8.5, 10, 11.5	3	5.0	3.1
Ø 7,0	7, 8.5	2.5	5.0	3.1
Ø 8,0	7, 8.5	2.8	5.0	3.1

Note: all measurements in mm

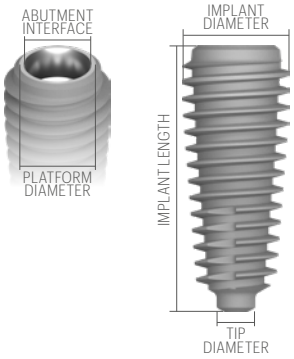

PRODUCT CATALOGUE

Note: all measurements of diameters and lengths are in mm

Implants:

IM37100-0	JDIcon Plus Ø 3.5 L 10
IM37115-0	JDIcon Plus Ø 3.5 L 11.5
IM37130-0	JDIcon Plus Ø 3.5 L 13
ICT40080.	JDIcon Plus Ø 4.0 L 8.5
ICT40100.	JDIcon Plus Ø 4.0 L 10
ICT40115.	JDIcon Plus Ø 4.0 L 11.5
ICT40130.	JDIcon Plus Ø 4.0 L 13
ICT40150.	JDIcon Plus Ø 4.0 L 15
ICT40180.	JDIcon Plus Ø 4.0 L 18
ICT45080.	JDIcon Plus Ø 4.5 L 8.5
ICT45100.	JDIcon Plus Ø 4.5 L 10
ICT45115.	JDIcon Plus Ø 4.5 L 11.5
ICT45130.	JDIcon Plus Ø 4.5 L 13
ICT50080.	JDIcon Plus Ø 5.0 L 8.5
ICT50100.	JDIcon Plus Ø 5.0 L 10
ICT50115.	JDIcon Plus Ø 5.0 L 11.5
ICT50130.	JDIcon Plus Ø 5.0 L 13
ICT55080.	JDIcon Plus Ø 6.0 L 8.5
ICT55100.	JDIcon Plus Ø 6.0 L 10.0
ICT55115.	JDIcon Plus Ø 6.0 L 11.5
ICT70070.	JDIcon Plus Ø 7.0 L 7.0
ICT70080.	JDIcon Plus Ø 7.0 L 8.5
ICT80070.	JDIcon Plus Ø 8.0 L 7.0
ICT80080.	JDIcon Plus Ø 8.0 L 8.5

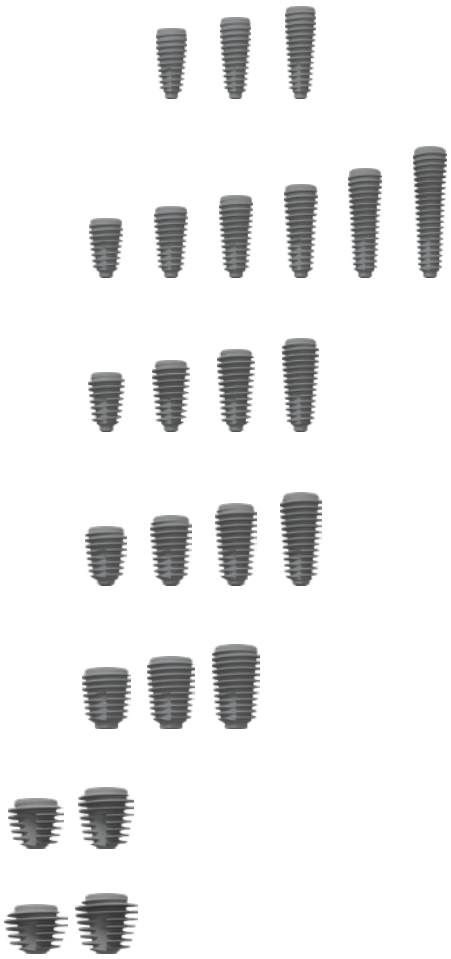

Note: All the prosthetic components are the same as JDIcon Plus implant line

DRILLING PROTOCOLS

It is recommended to adhere to the indications of the following drilling sequence to ensure optimal primary stability of the implants.

	HEALED BONE		POST EXTRACTIVE BONE	
IMPLANT DIAMETER	SOFT BONE	MEDIUM-DENSE BONE	SOFT BONE	MEDIUM-DENSE BONE
site preparation in maxilla				
Ø 3,5	2,0 2,4 2,8 up to the 1st laser mark L 6mm	2,0 2,4 2,8 3,2 up to the 1st laser mark L 6mm	2,0 2,4 2,8 at the entrance	2,0 2,4 2,8 3,2 up to the 1st laser mark L 6mm
Ø 4,0	2,0 2,4 2,8 3,2 at the entrance	2,0 2,4 2,8 3,2 up to the 1st laser mark L 6-8mm 3,6 at the entrance	2,0 2,4 2,8 3,2 at the entrance	2,0 2,4 2,8 3,2 at the entrance
Ø 4,5	2,0 2,4 2,8 3,2 3,6 up to the 1st laser mark L 6mm	2,0 2,4 2,8 3,2 3,6 up to the 1st laser mark L 6mm 4,0 at the entrance	2,0 2,4 2,8 3,2 3,6 at the entrance	2,0 2,4 2,8 3,2 3,6 up to the 1st laser mark L 6mm
Ø 5,0	2,0 2,4 2,8 3,2 3,6 4,0 at the entrance	2,0 2,4 2,8 3,2 3,6 4,0 up to the 1st laser mark L 6mm 4,4 at the entrance 4,8 at the entrance	2,0 2,4 2,8 3,2 3,6 at the entrance	2,0 2,4 2,8 3,2 3,6 up to the 1st laser mark L 6mm 4,0 at the entrance
Ø 6,0	2,0 2,4 2,8 3,2 3,6 4,0 4,4 up to the 1st laser mark L 6mm 4,8 up to the 1st laser mark L 6mm	2,0 2,4 2,8 3,2 3,6 4,0 4,4 up to the 1st laser mark L 6mm 4,8 up to the 1st laser mark L 6mm	2,0 2,4 2,8 3,2 3,6 4,0 4,4 up to the 1st laser mark L 6mm 4,8 at the entrance	2,0 2,4 2,8 3,2 3,6 4,0 up to the 1st laser mark L 6mm 4,4 at the entrance 4,8 at the entrance
site preparation in mandible				
Ø 3,5	2,0 2,4 2,8 3,2 up to the 1st laser mark L6mm	2,0 2,4 2,8 3,2 up to the 2nd laser mark L8mm 3,6 up to the 1st laser mark L 6mm	2,0 2,4 2,8 3,2 at the entrance	2,0 2,4 2,8 3,2 up to the 2nd laser mark L8mm
Ø 4,0	2,0 2,4 2,8 3,2 3,6 up to the 2nd laser mark L8mm	2,0 2,4 2,8 3,2 3,6 4,0 up to the 2nd laser mark L8mm 4,4 up to the 1st laser mark L 6mm	2,0 2,4 2,8 3,2 at the entrance	2,0 2,4 2,8 3,2 3,6 at the entrance
Ø 4,5	2,0 2,4 2,8 3,2 3,6 at the entrance 4,0 at the entrance	2,0 2,4 2,8 3,2 3,6 4,0 4,4 4,8 at the entrance	2,0 2,4 2,8 3,2 3,6 at the entrance	2,0 2,4 2,8 3,2 3,6 4,0 at the entrance
Ø 5,0	2,0 2,4 2,8 3,2 3,6 at the entrance 4,0 at the entrance	2,0 2,4 2,8 3,2 3,6 4,0 4,4 4,8 at the entrance	2,0 2,4 2,8 3,2 3,6 at the entrance	2,0 2,4 2,8 3,2 3,6 4,0 at the entrance
Ø 6,0	2,0 2,4 2,8 3,2 3,6 4,0 4,4 4,8 up to the 1st laser mark L 6mm 5,4 up to the 1st laser mark L 6mm	2,0 2,4 2,8 3,2 3,6 4,0 4,4 4,8 5,4 up to the 2nd laser mark L8mm	2,0 2,4 2,8 3,2 3,6 4,0 at the entrance 4,4 at the entrance 4,8 at the entrance	2,0 2,4 2,8 3,2 3,6 4,0 up to the 1st laser mark L 6mm 4,4 up to the 1st laser mark L 6mm 4,8 up to the 1st laser mark L 6mm

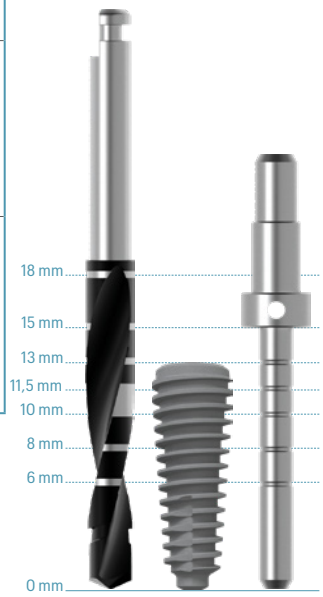

Note: all measurements in mm

DRILLING PROTOCOLS - Ø 7.0 mm / Ø 8.0 mm

Implant diameters 7 mm and 8 mm are recommended for posterior maxillary sites and in molar post extractive bone.

IMPLANT DIAMETER	SOFT BONE	MEDIUM-DENSE BONE
Ø 7,0	2,0 2,4 2,8 3,2 3,6 4,0 4,4 4,8 up to the 1st laser mark L 6mm	2,0 2,4 2,8 3,2 3,6 4,0 4,4 4,8 up to the 1st laser mark L 6mm
Ø 8,0	2,0 2,4 2,8 3,2 3,6 4,0 4,4 4,8 up to the 1st laser mark L 6mm 5,4 up to the 1st laser mark L 6mm	2,0 2,4 2,8 3,2 3,6 4,0 4,4 4,8 up to the 1st laser mark L 6mm 5,4 up to the 1st laser mark L 6mm

Note: all measurements in mm

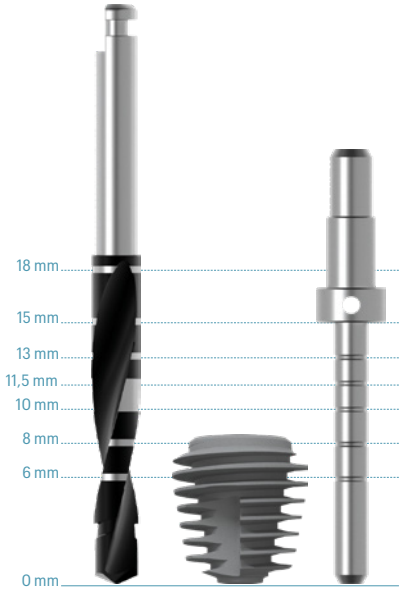

J DENTAL CARE

www.jdentalcare.com

JDentalCare, the JDentalCare logo and other trademarks mentioned in this document are, excluding specifically mentioned exceptions, trademarks property of JDentalCare.
The images of the products represented in this brochure are not necessarily to scale.
Note: Not all products manufactured by JDentalCare and represented in this brochure have been regulatory cleared/released for sale in all countries and/or have been licensed in accordance with FDA Rules and Regulations.
For more information about current product assortment and availability, please contact your local JDentalCare distributor. For prescription only.
Caution: Federal (US) law restricts this device to sale by or on the other for a licensed dentist. See instructions for use for more information such as indications, warnings, precaution and contraindications.

ICPTCAT
REV.11 of 2026-07-21